Fixed Dome Mount

TR-WM03-D-IN

Specifications

Bracket	TR-WM03-D-IN
Application	Wall installation for IPC32XS/E/L and IPCT1XX series
Dimensions	126.7 × 126.4 × 183.4mm (4.99” × 4.98” × 7.22”)
Weight	0.52kg (1.15lb)
Material	Aluminum alloy
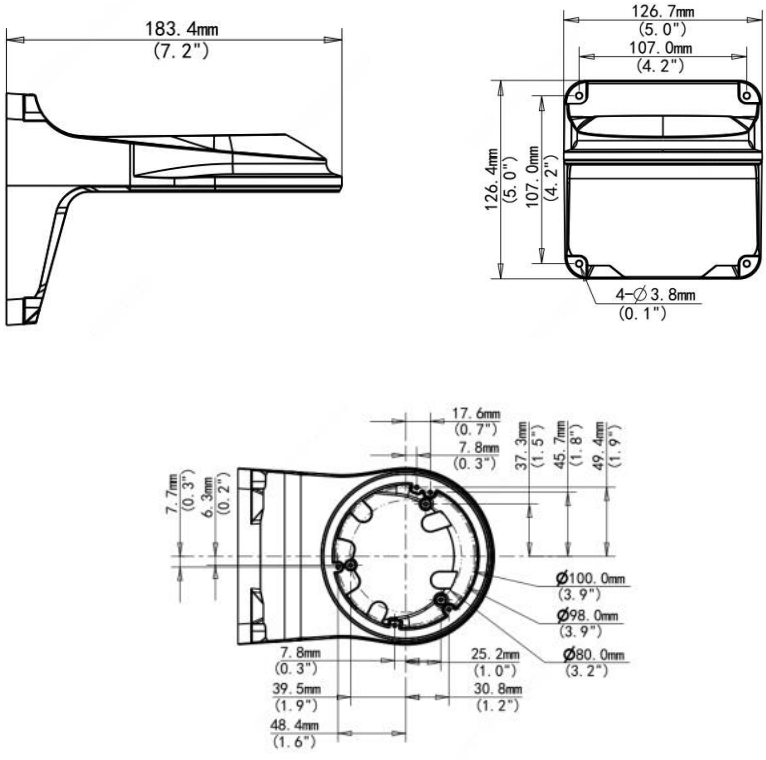
Dimension