IXG-MK

IP Video Guard Station

DESCRIPTION

The IXG-MK is an IP video guard station with a 7" LCD touchscreen for the IXG Series multi-tenant system. A guard unit can have up to 8 IXG-MK stations. The IXG-MK station can answer calls from an entrance station, tenant station, or individual door station. Once the call is answered, communication can be hands-free (VOX) or full duplex (handset). Touching the key button will activate the door release associated with the connected entrance station or door station. The IXG-MK can have up to 9,999 units in its address book and it will maintain a history of calls that it has received. A microSD card can be added to record calls that are placed to the IXG-MK IP video guard station.

FEATURES

- 7" TFT color LCD touchscreen
- Color video camera with privacy shutter
- 9,999 unit address book
- View ONVIF Profile S cameras
- Multi-angled desk stand included (30°, 45°, 60°)
- Slot for microSD™ card (not provided by Aiphone)
- 802.3af PoE compliant
- 2 contact outputs, 4 trigger inputs
- 8Ω 0.5W speaker output
- 600Ω audio input

Aiphone Corporation
www.aiphone.com
tech@aiphone.com
(800) 692-0200

IXG-MK

IP Video Guard Station

FEATURE CALL-OUT

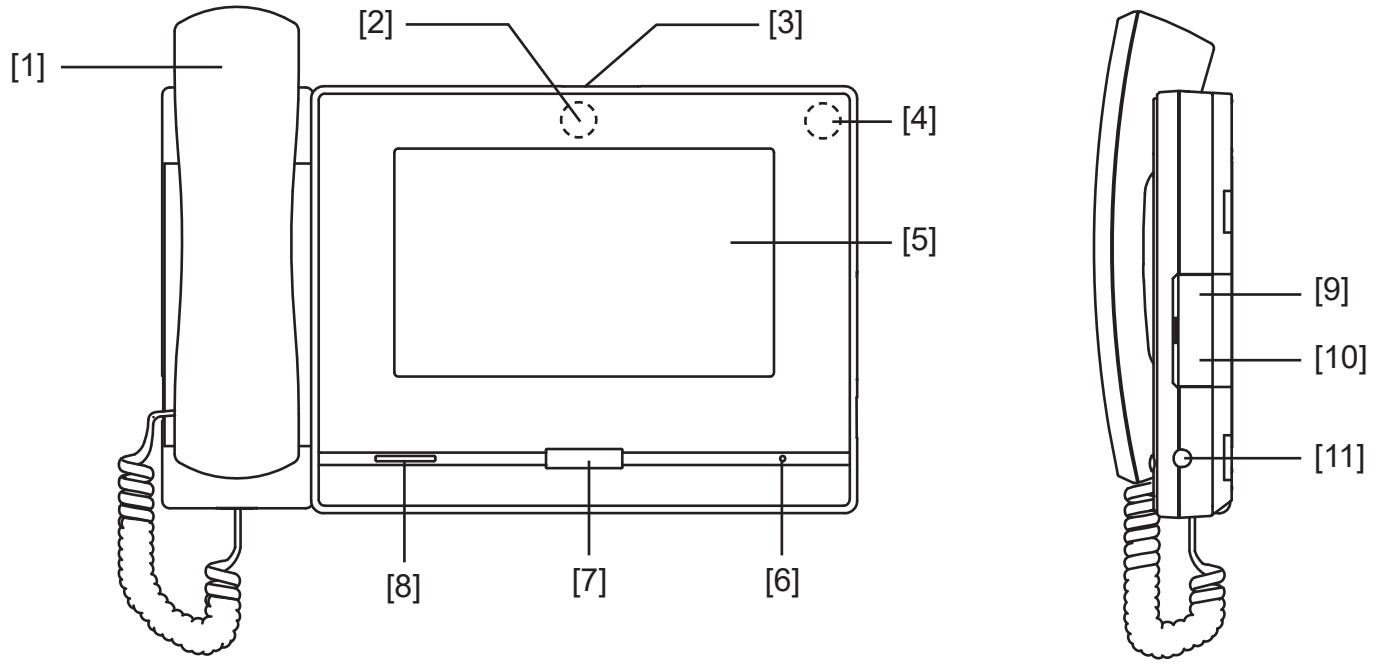

FEATURE CALL-OUT DEFINITIONS

[1] Handset

[2] Camera

[3] Privacy mask cover (on top)

[4] Status indicator light (orange / blue)

[5] 7" touchscreen (LCD)

[6] Microphone

[7] Home button

[8] Speaker

[9] Reset button (under door)

[10] Slot for microSD™ card (under door)

[11] 3.5mm stereo mini jack

SPECIFICATIONS

Power Source:	PoE
Consumption:	3.2W standby, 7.4W max
Screen:	7" LCD TFT touchscreen
Monitor resolution:	800 x 400
Communication:	Full-duplex
Audio Codec:	G.711(μ-law, A-law)
Video Codec:	H.264, MJPEG
Protocol:	IPv4/v6, TCP, UDP, SIP, HTTP, HTTPS, RTSP, RTP/RTCP, IGMP, MLD, SMTP, FTP, DHCP, NTP, DNS, TLS
Encryption:	TLS 1.0, 1.1, 1.2
Operating Temp:	32° ~ 104°F (0° ~ 40°C)
Dimensions:	8-1/16" H x 11" W x 2-3/16" D

Aiphone Corporation
www.aiphone.com
tech@aiphone.com
(800) 692-0200