B-TECH AV MOUNTS

AV AWARDS 2017
MANUFACTURER OF THE YEAR
WINNER

ULTRA CLEAN DESIGN

BT4000

SMALL FLOOR BASE
FOR Ø60MM POLES

A modular based system which allows for a custom built flat screen display floor stand, this small floor base is designed to be used with B-Tech's Ø60mm poles. After picking a base, choose a suitable height pole and a screen interface kit depending on the type of installation. Bases can be used freestanding or be bolted to the floor.

SPECIFICATION	
Max load (freestanding)	15kg
Max load (bolted to the floor)	35kg
Dimensions	575 x 395mm
No. of Ø60mm poles required	1

FEATURES

- Floor base designed for use with B-Tech's Ø60mm poles (BT4005/BT4011/BT4015/BT4020)
- Can be used freestanding or bolted to the floor
- Screen size and weight may be increased if floor base is bolted to the floor
- Supplied with optional rubber feet for use when freestanding
- Heavy duty 6mm thick steel construction
- Includes pole trim ring and pole end cap for a neat installation
- Features a grab handle for easy handling
- Poles, screen interface kit and accessories all sold separately

15KG

Can be used freestanding or bolted to the floor

Screen size and weight may be increased if floor base is bolted to the floor

Includes pole trim ring and pole end cap for a neat installation

Features a grab handle for easy handling

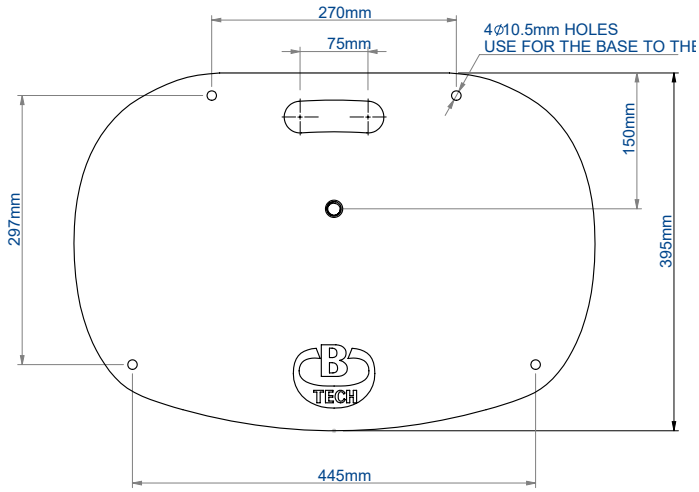

TOP VIEW

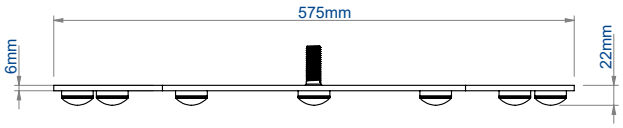

FRONT VIEW

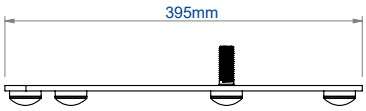

SIDE VIEW

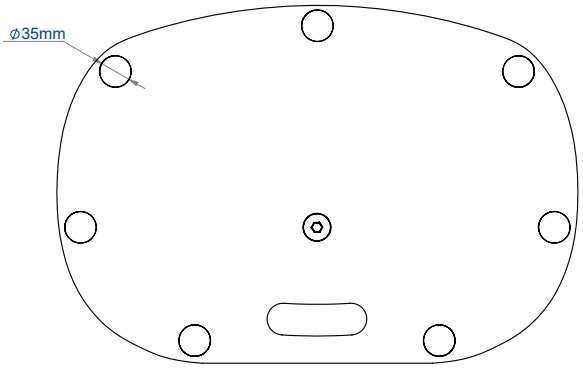

BOTTOM VIEW

PACKING INFORMATION

COLOUR:	ORDER REF:	EAN CODE:	MASTER CARTON QTY:	INNER CARTON QTY:	MASTER CARTON WEIGHT:	MASTER CARTON CUBE:
Black	BT4000/B	5019318077128	1	0	16.1KG	0.020CBM

RELATED PRODUCTS TO THE BT4000

BT4001

Medium Floor Base for use with a single Ø60mm pole

BT4002

Large Floor Base for use with dual Ø60mm poles

BT4102

Back-To-Back Floor Base designed to mount screens back-to-back with x2 Ø60mm poles

BT4005 / BT4011 / BT4015 / BT4020

Ø60mm Poles in 0.5m, 1.1m, 1.5 and 2m lengths

© 2019 B-Tech International Design & Manufacturing Ltd. All rights reserved.
The information in this specification sheet reflects the current technical specifications at the time of print.
We reserve the right to change the technical or physical specifications without prior notice. The B-Tech name and the B-Tech logo are registered trademarks of B-Tech International Design & Manufacturing Ltd.
All other brands and products are trademarks of their respective owners. All B-Tech images and symbols are exclusive property of B-Tech International Design & Manufacturing Ltd.
B-Tech accepts no liability for loss or damage caused by improper installation or mounting on unstable structures. Any reproduction or retransmission or republication of any part of this specification sheet is strictly prohibited, unless prior written permission has been granted by B-Tech International Design & Manufacturing Ltd. E&OE.

SS-V1-BT4000-160819